Evaluation tightening preloaded bolt assemblies according to EN 1090-2

"Technical requirements for steel structures" for 95% reliability EN 1990 *

Produced for CEN/TC 135 WG2

by:

Prof. ir. Jacques Berenbak

MSc CivilE

Member CEN/TC 135

Delft University of Technology

Structural Design

June 2012

BSD@Berenbak.com

***This evaluation is accepted by CEN/TC 135 WG2 in their meeting September 10, 2012 to use for the next revision of the EN 1090-2 "Technical requirements for steel structures".**

Purpose of this document is to evaluate the results of chapter 8.5 "Tightening of preloaded bolt assemblies" EN 1090-2 Execution of steel structures and aluminium structures Part 2: Technical requirements for steel structures.

1 General

This evaluation is based on the description for the tightening of preloaded bolts given in EN 1090-2. The four mentioned methods of tightening are evaluated for the reliability of the execution and their ability to fulfill the 95% reliability as asked for in clause 4.2 of the EN 1990 for the demanded nominal minimum preload force of $F_{p,c} = 0{,}7\, f_{ub} A_s$ as mentioned in clause 8.5.1. of EN 1090-2

Therefore the variation is determined for the pre-tensioning by the second step of tightening between the 95% lower fractile value $0{,}7\, f_{ub} A_s$ for the nominal minimum preload force, and the 5% upper fractile value $0{,}9\, f_{ub} A_s$ for the ultimate nominal tensile strength of the bolt assembly, according to the normal distribution.

Based on the assumption that the connections are fully packed by the first step of tightening, the reliabilities for the preload reached by the second step of the four tightening methods are determined in this paper.

Chapter 8.5 of the EN 1090-2 gives the four tightening methods allowed for the preloading of bolt assemblies.

1. The torque method
2. The combined method
3. The HRC method
4. The direct tension indicator (DTI) method

For all four methods, the preloading of the bolts has to be executed in two steps. The first step is needed to be sure that the package of steel plates is fully closed before the final preloading starts. This needs to be checked to avoid later compression of the package in the progress of final preloading. It needs to be avoided that earlier preloaded bolts are unloaded during the later preloading of subsequent bolt assemblies. This first step is described in clause 8.5.1 of EN 1090-2. (see Annex A)

In a second step the bolt assemblies shall be tensioned to a level that meets the reliability of the required preload asked for by the design, but not be stressed or elongated too close to failure. This means that the second step asks for a much higher level of accuracy and control than the first step. The steps for each method are explained in clause 8.5.2 to 8.5.6 of EN 1090-2. (see Annex A)

For this evaluation the "Rotation/bolt force curve" is used mentioned in clause 4.4.4 of EN 14399-1 "High-strength structural bolt assemblies for preloading" and described in EN 14399-2 (figure-2). (mentioned in Annex C of this paper)

This curve is numerically specified in tables 8 and 9 of EN 14399-2 and tables in 6 and 7 of EN 14399-4, as the characteristic or nominal minimum value line for the "Rotation/bolt force curve" of the EN 14399 HR and HV bolt assemblies, by the rotation of the nut in relation with the bolt shaft.

Figure 2 in Annex C makes clear that using the Torque and the DTI method, a larger part of the bolts may yield in the plastic deformation part of the Rotation/bolt force curve using the values mentioned in the EN 1090-2.

The results of this evaluation are summarized in the rotation/preload figures in Annex D of this paper. For these figures 10.9 HV or 10.9 HR bolt assemblies with $2\,d \le t \le 6\,d$ are used.

NOTE 1: No human inaccuracies are taken into account in this evaluation.

NOTE 2: To meet the clear thread pitches after installation as demanded in clause 8.2.2 of EN 1090-2, the HR bolt assemblies with their longer thread lengths may be less critical to meet the real clamp lengths in the connections and therefore may be more reliable and may save installation costs.

2 Conclusions

2.1 Clause 8.5.1 of EN 1090-2 determines that "unless otherwise specified the nominal minimum preloading force $F_{p,c}$ shall be taken as $0{,}7\,f_{ub}A_s$".

EN 1990 determines in clause 4.2 that this nominal minimum preload $F_{p,c} = 0{,}7\,f_{ub}A_s$, shall be reached with a reliability of 95% according to a Normal distribution.

The values for the reliability according to the present methods mentioned in EN 1090-2 are determined as:

1. The torque method:	reliability	79,4	%
2. The combined method:	reliability	100	%
3. The HRC method:	reliability	81	%
4. The direct tension indicator (DTI) method:	reliability	> 95	%

2.2 For the torque method, the demanded K2 class HR or HV bolt assemblies according to the EN 14399-3 or EN 14399-4 may not fulfill the reliability of 95 % under the present conditions as mentioned in EN 1090-2. Both bolt codes allow in their clause 7.5.2 a variation on the *k*-factor $V_k \le 0{,}10$ where the design code is based on a *k*-factor $V_k \le 0{,}06$.

The *k*-factor $V_k \le 0{,}10$ with a target mean value of $0{,}77\,f_{ub}A_s$ is to wide to match the preload of $0{,}70\,f_{ub}A_s$ asked for in the design codes and therefore leads to an unacceptable reliability of 79,4 % instead of the required 95 %. (last line Annex D.1.1 column 2 and Figure D.1)

Two alternative possibilities are open to correct this non-conformity:

1. To reach the 95% asks for $V_k \le 0{,}06$ in the EN 1090-2 with a connecting mean target value of $0{,}80\,f_{ub}A_s$ instead of $0{,}77\,f_{ub}A_s$.

   This adjustment will rise the reliability up to 94,8 % (Annex D.1.2 column 3, Figure D.2)

   A very small risk (0,2% exceed) is the possibility that some bolt assemblies with a low friction will exceed the $0{,}90\,f_{ub}A_s$ minimum nominal value of the bolt strength, leading to an uncontrolled rotation of the nut. This risk is acceptable because this exceed should be combined with the variation in the real strengths of the individual bolt assemblies.

2. A second solution should be the introduction of an extra reduction factor for the Torque method γ_{torque} = 1.10 on the value of the nominal preload for design in the EN 1993 design codes. This adjustment will raise the reliability up to 94,2 % and results in an exceed of 1,2 % over the 0,90 $f_{ub}A_s$. (Annex D.1.3 column 3, and Figure D.3)

   However this solution deviates from previous agreements between CEN/TC 250/SC3 and CEN/TC 135 and has to be agreed with EC3 and shall not be accepted.

Bold assemblies with $V_k \leq 0{,}06$ in combination with a target value of 0,80 $f_{ub}A_s$ may fulfill the 95% reliability for the value of $F_{p,c}$ = 0,7 $f_{ub}A_s$ as asked for in clause 8.5.1 in the EN 1090-2.

Bolt assemblies with wider specifications should be tightened with the combined method.

The Figures D.2 and D.3 show clearly that most of the bolts shall yield using the Torque method, some to the same level as tightened by the Combined method, but uncontrolled.

2.3 The combined method is based on an elongation of the bolt shank by a controlled rotation of the nut in relation to the bolt. The preload values reached by this rotation are all close to the maximal preload force on the "rotation/bolt force curve" as required in the EN 14399-2

The reliability to reach 0,70 $f_{ub}A_s$ is 100%. Moreover, the expected preload is close to the real 0,90 $f_{ub}A_s$ yield strength of the bolt assembly. This additional preload, above the demanded 0,70 $f_{ub}A_s$, gives an extra security for losses due to eventual creep due to layers of corrosion protection in the connections, or for the resist to structural loads on the connections. (See Figure D.4)

The ability to visually control the rotation of each nut also fully guaranties that enough thread was available on the bolt shaft before elongating the bolt assembly to the demanded preload.

The combined method is the only tightening method using the real strength of the individual bolt assemblies. The second step is quick and easy to execute and the amount of yield is reliable and allows all over control, even by non-specialist supervisors.

2.4 The second step for the HRC bolt assemblies produces nearly the same results as the torque method. The EN 14399-10 allows the same $V_k \leq 0{,}10$ as for the class K2 bolt assemblies according to EN 14399-3 and EN 14399-4.

The *k*-factor $V_k \leq 0{,}10$ is too wide to match the preload of 0,70 $f_{ub}A_s$ asked for in the design codes and leads to an unacceptable reliability of 81 % instead of the required 95 %.

(Annex D.2.1 column 2, Figure D.5)

NOTE:

As the tools used for installation do not have influence on the "combined $V_{comb.}$" factor, these correction factors will be a somewhat lower than those for the torque method.

Column 3 in Annex D.2.1 gives as possibility lifting the target/mean value up to 0,85 $f_{ub}A_s$, close to the nominal minimum top preload in the bolt assembly of 0,90 $f_{ub}A_s$,

The top value of the to expect distribution should be 0,995 $f_{ub}A_s$. A real high value even assuming that the HRC spline should shear of before the bolt assembly should collapse. These values do not seem to be realistic for 10.9 bolts according to the EN 14399 series.

For the HRC method nearly the same two possibilities as for the torque method are open to correct the non-conformity:

1. To meet 95% reliability, requires that $V_k \leq 0{,}06$ should be demanded in the EN 1090-2 with a mean target value of 0,79 $f_{ub}A_s$ instead of 0,77 $f_{ub}A_s$. This adjustment will raise the reliability up to 95,9 % (Annex D.2.2 column 3, and Figure 6). This may also be changed in EN 14399-10.

2. A second solution should be the introduction of an extra reduction factor for the HRC method γ_{torque} = 1.10 too on the value of the nominal preload for design in the EN 1993 design codes. This adjustment will raise the reliability up to 95,4% (Annex D.2.3 column 3,and Figure D.7).
   However this solution also deviates from previous agreements between CEN/TC 250/SC3 and CEN/TC 135 and has to be agreed by EC3 and shall not be accepted too.

Assuming that the bolt shaft will always be stronger than the break-neck of the spline end, overturning or overload by exceeding the nominal strength of the bolt may not happen with HRC bolt assemblies.

At the moment no calibrated controls are available to check the preloads reached by the first step. Loss of preload by pressing the connection together during the second step may occur making progress during the final tightening of the later bolt assemblies. No correction is possible as the torque moment is not known at spline shear off.

2.5 The reliability of the DTI method should be determined by the production tests for the washers according to EN 14399-9 clause 3.3.

Samples of direct tension indicators shall be tested by the manufacturer after the final production process including the surface finish, if any. The minimum number of direct tension indicators tested per manufacturing lot shall be eight and all samples shall pass the test.
Table 4 of EN 14399-9 indicates that the results shall be between 0,70 $f_{ub}A_s$ and 0,84 $f_{ub}A_s$ (See Table 4 EN 14399-9 in Annex E). This test fulfils the 95% reliability asked for by EN 1990.
These tests are made by well skilled laborers in a laboratory for a single bolt in a machined massive steel block with no other bolts to influence the measurements. A small over- or under rotation of the nut or bolt will influence the results of the test considerable.

In practice the bolts shall be tightened by less skilled laborers under site circumstances for wide connection packages where the bolts may influence each other. They have to work very accurate within small ranges of allowed rotations to be controlled with feelers.
The demand that no more than 10% of the indicators in a connection bolt group shall exhibit full compression of the indicator is needed to prevent uncontrolled rotation of the nuts.
Overturning may lead to passing the 0,84 $f_{ub}A_s$ on the rotation/bolt force curve, leading to a reduction close to or even below the demanded preload of 0,70 $f_{ub}A_s$.

Attention has to be paid to the corrosion protection of the remaining gaps between the washers to prevent splice or stress corrosion.

Overall the DTI method is very sensitive for accidental overloading on tension. The remained gaps may be closed pressing the protrusions flat. As they shall not spring back, the preload shall be reduced after such an overload. The same loss of preload may happen when the connection is pressed together by an increasing number of tightened bolts during the second step

2.6 Part of the reliability is the control on the reached preload.

2.6.1 The preload reached by the torque method may be controlled by checking the individual bolt assemblies again using the known torque moment, supposing that no extra torque is needed to start for an eventual correction on the rotation.

For the second step the Torque method requires adjustable torque wrenches with 4% accuracy, at least weekly checked and in case of pneumatic wrenches every time hose length is changed.

2.6 For the combined method the amount of the rotation of the nut in relation to the shank may be 100% visually controlled by checking the markings between the nut and bolt.

If doubt, some nuts may be turned some degrees further to prove the resistant.

For the second step of the Combined method each type of wrench may be used.

2.6.3 The real preload on the HRC bolt assemblies cannot be checked after the spline has sheared off. The torque moment on the moment of the shear off is not known.

For the HRC method specific shear wrenches need to be used.

2.6.4 The reached preload on the DTI bolt assembly depends on the correct measuring with a precision of tenths of millimeters using feelers by construction workers on site. Maybe they may not reach the same accuracy as the production controllers.

2.6.5 No flattening data are available to measure the pressing to reach the first step

To reach a firm packed connection to avoid loss of preload during the second step during the progress of the tightening is difficult to reach because of the indirect and accurate way of controlling the flattening of the protrusions.

In the second step only 10% of the bolt assemblies shall be fully pressed.

The preload once reached by the DTI method may be controlled by checking the individual bolt assemblies again by measuring the remaining gaps between the washers.

The bolt assemblies are sensitive for accidental overload pressing the protrusions flat. This may result in loss of preload as they do not spring back.

For the second step of the DTI method each type of wrench may be used.

NOTE 1: *The evaluation in this paper is based on the use of new and well packed bolt assemblies, transported and stored in a way that no alteration in the k_i factor can occur. When in doubt, a calibration test as described in Annex H of EN 1090-2 shall be executed before use.*

NOTE 2: *After the final preloading a small gap remains between the DTI washer and the contra surface, which may be sensitive for splice corrosion and may give access for possible stress corrosion in the preloaded thread of the bolt, when the bolt material is sensitive for this reaction*

3 Type of bolt assemblies to be used for preloading.

According to chapter 5.6.4 EN 1090-2 high strength structural bolt assemblies for preloading include system HR, system HV and HRC bolts. The deliveries shall satisfy the requirements of the harmonized EN 14399-1 (CE-marking) and the appropriate European Standard as listed next table 7 of EN 1090-2.

Table 7 of EN 1090-2: Product standards for high strength structural bolting assemblies for preloading.

Bolts and nuts	Washers
EN 14399-3 EN 14399-4 EN 14399-7 EN 14399-8 EN 14399-10	EN 14399-5 EN 14399-6

NOTE: For an overview of the EN 14399-1/10 series, see Annex B

EN 14399-2 gives the suitable tests for preloading, including technical requirements as the relations for the "rotation/bolt force curve" in figure 2 of EN 14399-2 and Annex C and D of this paper.

The basic bolts for the Torque, Combined and DTI assemblies are the Hexagon HR and HV bolts as described in the EN 14399-3 and EN 14399-4. They shall be delivered in sealed boxes in one of the three K-classes with the following information on the boxes as mentioned in table 6 of EN 14399-1:

k-class	Information to be supplied
K0	No requirements for *k*-factor
K1	Range of individual test value k_i
K2	Mean test value k_m Coefficient of variation of *k*-factor V_k

With: k_i relation factor between the torque on the nut and the preload in the bolt according to the formula $M_i = k_i\, d\, F_{p.c}$

V_k standard deviation for the k_i in production series

(These values are only valid for tightening by a rotation of the nut.)

Table 20 of EN 1090-2 describes which K-classes of bolt assemblies shall be used for the four allowed tightening methods:

Tightening method	k-classes
Torque method	K2
Combined method	K2 or K1
HRC tightening method	K0 with HRD nut only or K2
Direct tension indicator (DTI) method	K2, K1 or K0

According to clause 8.2.2 at least one thread pitch shall protrude out of the nut, and at least four full threads (in addition to the thread run out) shall remain clear between the bearing surface of the nut and the unthreaded part of the shank.

The lengths of the threaded parts on the bolt shafts of the HR bolts are wider than the lengths on the HV bolts. That means that the choice for the lengths of the HV bolts to fulfill this demand during installation are more critical to meet the real clamp lengths of the connection.

HR bolt assemblies make it easier to fulfill this demands and may save labor costs.

4 Determination of the possible distribution range for the second step preload values.

The minimum nominal value to be reached, according to the reliability approach given in Annex B of the EN 1990, shall be the nominal value of the preload used for the designs.

This nominal minimum preload for design is defined in chapter 8.5.1 of EN 1090-2 as:

"Unless otherwise specified the nominal minimum preloading force $F_{p,C}$ shall be taken as $F_{p,C} = 0,7\ f_{ub}A_s$ where f_{ub} is the nominal ultimate strength of the bolt material and A_s is the stress area of the bolt (Annex A)."

This value corresponds to the nominal minimum value used for the designs as mentioned in clause 3.9.1(2) of EN 1993-1-8.

The maximum nominal top value of tightening should be equal to the maximum individual tension value of each bolt force. The specific HS and HV bolt codes EN 14399-3 and EN 14399-4 reduced the nominal minimum top preload in the bolt assembly to $F_{bi.max} = 0,90\ f_{ub}A_s$ due to the combination of tension and shear during tightening.

Therefore the criterions to the target ranges for the final preload by a torque or load indicated methods (torque, combined, HRC or DTI) are restricted to:

$$0,7\ f_{ub}A_s \leq F_{bi.max} \leq 0,9\ f_{ub}A_s.$$

For the Combined method the target on top should be restricted to a maximum rotation of $\Delta\Theta_2$ to be sure that the preload is well above $0,7\ f_{ub}A_s$ and close to $0,9\ f_{ub}A_s$.

(See Annex C and figure D.2 of this evaluation)

5 Tightening methods.

5.1 General

For all methods the tightening will be executed in two steps. The first step to close the package of the to combine steel plates to be sure that no gaps between plates are left before starting the second step for tightening to the final preload. Between the first and second step the packages shall be inspected to be sure that the packages are fully packed to prevent that already finally tightened bolts are unloaded by the tightening of later bolts closing left open gaps.

5.2 Tightening first step Torque method

The determination of the preload in the bolt assembly by the Torque method is based on the relation between the height of the torque on the nut and the effecting preload in the shaft of the bolt. The so called "relation coefficient" is influenced by the shear between the nut and the threat of the bolt and the shear between the nut and the direct bearing plain washer.

EN 1090-2 mentioned the formula for this relation in clause 8.5.2 as: $M_{r.2} = k_m d \,.\, 0{,}7\, F_{p.c}$

with:

$M_{r.2}$	torque on the nut
k_m	*k*-factor determine the relation torque/preload
d	diameter of the bolt
$F_{p.c}$	preload in the bolt assembly

Bolt assemblies with the K-class qualification K2 class shall be used for the Torque method.

These bolts assembly series are tested by the producer for the relation between the torque and the bolt assembly preload as described in the *k*-factor k_m.

These bolt assemblies shall be delivered in sealed boxes mentioning the factor k_m and the standard deviation V_k in accordance with these production tests.

For these class K2 bolt assemblies the following values apply in EN 14399-3 and 4:

$$0{,}10 \le k_m \le 0{,}23 \quad \text{and} \quad V_k \le 0{,}10$$

In the next determination the values on the packages of K2 bolt assemblies are only valid when the torque rotates the nut, rotating the head of the bolt needs a separate testing according to Annex H of EN 1090-2

Tightening assemblies:

For the Torque and Combined methods, the bolt assemblies shall be preloaded for the first step to the average value of 75 % of 0,7 $f_{ub}A_s$ = 0,525 $f_{ub}A_s$, according to article 8.5.3 of EN 1090-2.

For the first step to $F_{p,1}$ = 0,525 $f_{ub}A_s$, torque wrenches with an accuracy of 10% may be used.
In combination with a 10% friction variation in V_k, this may lead to a range of $(10^2+10^2)^{0,5}$ = +/- 14%.
According to clause 4.2 of EN 1990 the range of values shall be determined by ± 1,65 x 14,1 = 23,3%, leading to effected values between 0,40 $f_{ub}A_s$ and 0,65 $f_{ub}A_s$.

These values are not really critical. In case that the connection plate packages are not fully packed, additional measurements to correct the packages shall be performed, and the first step tightening shall start again. The bolt assemblies may be used again.

5.3 Tightening second step Torque Method:

Chapter 8.5.3 of EN 1090-2 defines as target the value of 10% above the nominal minimum preloading force of $F_{p,C} = 0{,}7\ f_{ub}A_s$ leading to $F_{p,C\ average} = 0{,}77\ f_{ub}A_s$, with the argument that this corresponds with a an increase of 1,65 times $V_k = 0{,}06$ for the friction of the bolt assemblies.

This value is although mentioned as $V_k = 0{,}10$ allowed by the bolt codes EN 14399-3 and EN 14399-4.

The "Second step" step is more critical than the first step and shall be evaluated considering other influences involved on the results too.

Standard deviations with influences on the preloading of bolt assemblies:

$V_{k.}$ assumed value for the EN 1090-2	± 0,06
$V_{k.}$ max. allowed for in the EN14399 series	± 0,10
During production	
EN14399-2: the required accuracy of the bolt force measuring device	± 0,02
EN 14399-2: the repeatability of the bolt force measuring device	± 0,01
EN 14399-2: the required accuracy of the torque	± 0,01
EN 14399-2: the repeatability of the torque	± 0,01
During execution	
EN 1090-2: the required accuracy of the torque in the second step	± 0,04

Calculations are given in Annex D.1 to D.3 for the torque method with variations in V_k, an additional material factor $\gamma_M = 1.10$ and an alternative for the target/mean value for the Normal distribution of the final preload.

Annex D.1.1 gives the result for the existing values mentioned / allowed in the EN 1090-2 with

Column 2: $V_k = 0{,}10$ and target/mean value 0,77 $f_{ub}A_s$ leading to:

- a 95% reliable preload reached at 0,629 $f_{ub}A_s$, leading to a 79,4 % reliability for the nominal load of 0,70 $f_{ub}A_s$.
- a 5% top value reached at 0,911 $f_{ub}A_s$ leading to an 1,2 % exceeding of the minimum nominal strength of the bolt assembly. Acceptable?

Column 3: $V_k = 0{,}10$ and target/mean value 0,80 $f_{ub}A_s$ leading to:

- a 95% reliable preload of 0,654 $f_{ub}A_s$, leading to a 87 % reliability for the nominal load of 0,70 $f_{ub}A_s$.
- a 5% top value of 0,946 $f_{ub}A_s$ leading to a 5,2 % exceeding of the minimum nominal strength of the bolt assembly. Not acceptable?

Both combinations don't fulfill the demand of clause 8.5.1 for a 95% reliability at 0,70 $f_{ub}A_s$.

Annex D.1.2 gives the result for alternative values

Column 2 : V_k = 0,06 and target/mean value 0,77 $f_{ub}A_s$ leading to:

- a 95% reliable preload reached at 0,672 $f_{ub}A_s$, leading to a 88,2 % reliability for the nominal load of 0,70 $f_{ub}A_s$.
- a 5% top value reached at 0,868 $f_{ub}A_s$ with no exceeding the 0,90 $f_{ub}A_s$

Column 3: V_k = 0,06 and target/mean value 0,80 $f_{ub}A_s$ leading to:

- a 95% reliable preload reached at 0,699 $f_{ub}A_s$, leading to a 94,8 % reliability for the nominal load of 0,70 $f_{ub}A_s$. Acceptable.
- a 95% top value reached at 0,901 $f_{ub}A_s$ leading to a 0,2 % exceeding of the minimum nominal strength of the bolt assembly. Acceptable.

The last combination fulfills the demand of clause 8.5.1 for a 95% reliable value of 0,70 $f_{ub}A_s$.
This adjustments for alternative two of D.1.2 is acceptable and may be executed by TC 135.

Annex D.1.3 gives the result for the existing values mentioned or allowed in the EN 1090-2 with

Column 2: V_k = 0,10 and target/mean value 0,77 $f_{ub}A_s$ and a material factor γ_M of 1,10 leading to:

- a 95% reliable preload reached at 0,629 $f_{ub}A_s$, leading to a 94,2 % reliability for the nominal load of 0,70/1,10 = 0,636 $f_{ub}A_s$.
- a 95% top value Reached at 0,911 $f_{ub}A_s$ leading to a 1,2 % exceeding of the minimum nominal strength of the bolt assembly. Acceptable?

This combination seems to be acceptable, but the last adjustments shall be accepted and executed in the EN 1993 codes and are not in line with the existing agreements between EC3 and TC135.

5.4 Tightening by the Combined method.

5.4.1 Tightening first step Combined method.

For the combined method, K1 bolt assemblies according to EN 14399 shall be used with a friction coefficient $0{,}10 \leq k_i \leq 0{,}16$.

The first step of the Combined method is equal to the Torque method, preloading up to 0,525 $f_{ub}A_s$ by turning the nut with a certain torque. Bolt assemblies *k*-class K1 shall be used with a *k*-factor in the range of $0{,}10 \leq k_i \leq 0{,}16$ according to EN 14399-3 or EN 14399-4. Because of the relative wide range of acceptable preloads, the simplified formula $M_{r.i} = 0{,}13\ d\ F_{p.c}$ may be used for the first step according to EN 1090-2 art 8.5.4.

This simplification may in extreme lead to a bottom preload of 0,10/0,13 x 0,525 $f_{ub}A_s$ = 0,40 $f_{ub}A_s$ and a top value of 0,16/0,13 x 0,525 $f_{ub}A_s$ = 0,65 $f_{ub}A_s$. This will creates a small difference in the rotation on the steep elastic part of the rotation/preload curve. (δ_o in figure D.4)

Assuming a normal distribution between 0,40 $f_{ub}A_s$ and 0,65 $f_{ub}A_s$ these rotation differences should be combined with the spread in the rotation installed in the second step of tightening as

$$\delta_{total} = \sqrt{\theta_0^2 + \theta_{second\ step}^2}$$

resulting in a very small differences related to the single values of the second step.

When the connection should not firmly be closed during this first step, the alignment of the connecting plates, the used tools and the *k*-factor of the used bolt assemblies shall be checked (Annex H of EN 1090-2), the connection shall be corrected and the first step shall be repeated.

5.4.2 Tightening second step Combined method.

The second step of the Combined method consist of the rotation of the nut by a dictated and controlled angle in relation to the bolt shaft to elongate the bolt to reach the required preload.
The angle of the last position depends on the grip length of the bolt as given in table 21 of EN 1090-2.

Before starting the second step of preloading, the position of the nut has be marked to the extended shaft of the bolt by paint, or another marking material, to make the control of the final turn of the nut in relation to the bolt possible. The bolt will yield by this elongation and therefore shall not be used again in case of rejection.

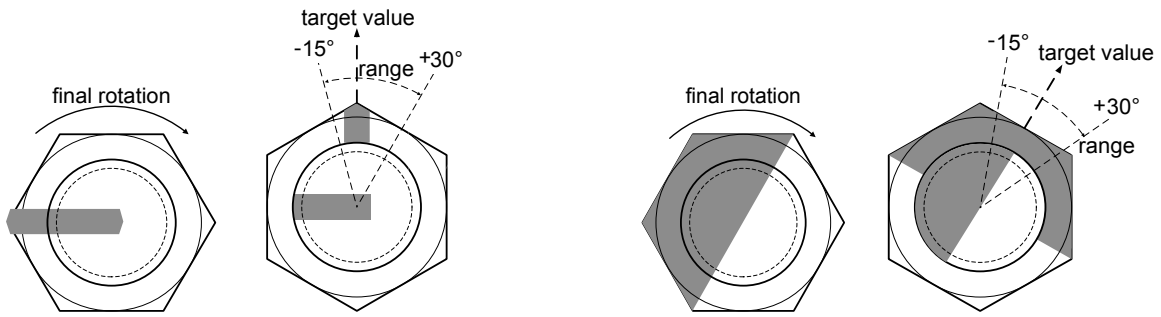

NOTE: Examples of marking before the second step. The solution on the right side is reached by shielding half the bolt shaft and nut by a cap and sprayed with a thin layer of paint. This method has preference because of the easy way of marking and clear control.
The bolts may be have a 100% reliable and easy visual control.

According to clause 12.5.2.5 of EN 1090-2 the markings indicating the angle of rotation shall be inspected after the second step using the following requirements:

a) if the rotation angle is more than 15° below the specified value, this angle shall be corrected;
b) if the rotation angle is more than 30° over the specified angle, or the bolt or the nut has failed, the bolt assembly shall be replaced by a new one.

Table 21 — Combined method: additional rotation (8.8 and 10.9 bolts)

Total nominal thickness "*t*" of parts to be connected (including all packs and washers)	Further rotation to be applied, during the second step of tightening	
d **= bolt diameter**	**Degrees**	**Part turn**
$t < 2\,d$	60	1/6
$2\,d \leq t < 6\,d$	90	1/4
$6\,d \leq t \leq 10\,d$	120	1/3
NOTE Where the surface under the bolt head or nut (allowing for taper washers, if used) is not perpendicular to the bolt axis, the required angle of rotation should be determined by testing		

These requirements mean that the allowable span of rotation for the second step is 15° + 30° = 45°, a-symmetric around the target value.

According to EN 14399-3 (HV) and EN 14399-4 (HR) the minimum angles ($\Delta\Theta_1$) by which the nut or bolt has to be turned, starting from a preload of 0,7 $f_{ub}A_s$, to reach the maximum pre-tension $F_{bi.max}$ on the rotation/bolt force line are as indicated in table 8 (HR) or 6 (HV) of these codes. They are equal for HR and HV bolts. (See Annex C of this paper)

The minimum angles ($\Delta\Theta_2$) by which the nut or bolt has to be turned starting from a preload of 0,7 $f_{ub}A_s$ until F_{bi} has dropped again to 0,7 $f_{ub}A_s$ (not collapse) are specified in table 9 of EN 14399-3(HR) or table 7 of EN 1090-4 (HV). For the HR bolts the $\Delta\Theta_2$ values are 30° higher than for the HV bolts. Annex C of this paper gives the figures and definitions for $\Delta\Theta_{1t}$ and $\Delta\Theta_{2t}$ as mentioned in EN 1090-2 together with the corrected line to EN 14399-3 and EN 14399-4 for the "Rotation/bolt force curve".

The values of the rotation angles used for the second step of the Combined method compared to the values in tables 6 and 7 for the system HV bolts in EN 14399-4 are:

Grip length Σt	Second step Combined Method min.	target	max.	$\Delta\Theta_1$ min.	$\Delta\Theta_2$ min.
$\Sigma t < 2d$	45°	**60°**	90°	**90°**	180°
$2d \leq \Sigma t < 6d$	75°	**90°**	120°	**120°**	210°
$6d \leq \Sigma t \leq 10d$	105°	**120°**	150°	**150°**	240°

The values of the rotation angles used for the second step of the Combined method compared to the values in tables 8 and 9 for the system HR bolts in EN 14399-3:

Grip length Σt	Second step Combined Method min.	target	max.	$\Delta\Theta_1$ min.	$\Delta\Theta_2$ min.
$\Sigma t < 2d$	45°	**60°**	90°	**90°**	210°
$2d \leq \Sigma t < 6d$	75°	**90°**	120°	**120°**	240°
$6d \leq \Sigma t \leq 10d$	105°	**120°**	150°	**150°**	270°

The $\Delta\Theta_1$ and $\Delta\Theta_2$ starts at 0,7 $f_{ub}A_s$. The second step of the combined method starts at the average value of 0,525 $f_{ub}A_s$, resulting in a slightly higher value between the first step and $\Delta\Theta_1$ or $\Delta\Theta_2$.

This table shows:

1. The target value of the second step for preload is for all grip lengths over 30° below the $\Delta\Theta_1$.
2. The minimal value of the second step for preload is for all grip lengths over 45° below the $\Delta\Theta_1$.
3. The maximum value of the second step for preload is for all grip lengths less than $\Delta\Theta_1$.
4. The average value of the second step for preload is for all grip lengths system HV bolts over 90° below the nominal value of $\Delta\Theta_2$.*(back to 0,7 $f_{ub}A_s$, not to collapse)*
5. The minimal value of the second step for preload is for all grip lengths system HR bolts over 120° below the nominal value of $\Delta\Theta_2$, for HR bolts 120°. *(back to 0,7 $f_{ub}A_s$, not to collapse)*

After the second step, with the rotation close to $\Delta\Theta_1$ on top of the nominal "Rotation/bolt force curve", the preload is at least close to minimum nominal top value of the bolt assembly strength. However, as the real strength of the bolt assembly will be higher than the nominal strength, the preload may even be higher than the nominal value of 0.90 $f_{ub}A_s$. (See annex D.4)

A great extra advantage of the Combined method is the structural use of the typical extra strength of bolt assemblies above the nominal value as required in the EN 14399 codes.

5.5 Tightening by the HRC method

5.5.1 General

The HRC bolt assembly is not a widely used type for preloaded bolts in Europe. The EN1090-2 gives the following description in art 8.5.5.:

"The HRC bolts shall be tightened using a specific shear wrench equipped with two co-axial sockets which react by torque one against the other. The outer socket which engages the nut rotates clockwise. The inner socket which engages the spline end of the bolt rotates anticlockwise."

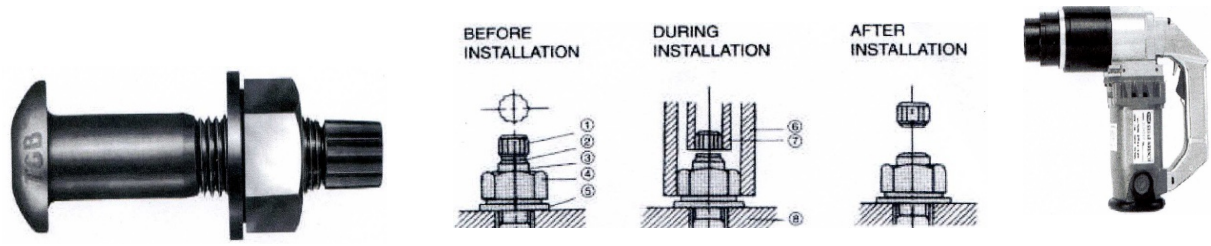

NOTE 1 *The shear wrench operates as follows:*

- *during the tightening operation of an assembly, the socket in rotation is the one that finds the least resistance to it;*
- *from the outset and right up to the last tightening step, the outer socket on the nut rotates clockwise while the inner socket holds the spline end without rotating, the result being that the bolt assembly is progressively tightened by the increasing torque applied to the nut;*
- *at the last tightening step, i.e. when the torsional resistance plateau of the break-neck section is attained, the inner socket rotates anticlockwise while the outer socket on nut provides the reaction without rotating;*
- *the bolt assembly installation is complete when the spline end shears off at the break-neck section.*

The specified preload requirement is in fact a Torque method, controlled by the HRC bolt itself by means of the geometrical and torsion mechanical nominal's together with the lubrication conditions. The tightening equipment does not need calibration.

In order to ensure that the preloads in the fully installed bolt assemblies in the connections meet the specified minimum preload requirement, the bolt installation process should also comprise two tightening steps; both using the same shear wrench.

5.5.2 Tightening first step HCR method

The first tightening step is achieved at the latest when the shear wrench outer socket stops turning. This first step shall be completed for all bolts in a connection prior to commencement of the second step.

NOTE 2 *Guidance of the equipment manufacturer may give additional information on how to identify if pre-tightening has occurred, e.g. sound of shear wrench changing, or if other methods of pre-tightening are suitable.*

The two expect preload values by this methods are not quantified and may depend on the stiffness of the connections. Before starting the second step, the closure of the steel plate package has to be checked. If not fully closed, the bolt assemblies shall be removed and the package shall be corrected.

5.5.2 Tightening second step HCR method

The second tightening step is achieved when the spline end of the bolt shears off at the break-neck.

If the assembly conditions are such that it is not possible to use the shear wrench on the HRC bolt assembly, e.g. for lack of space, tightening shall be carried out using a procedure in accordance with the Torque method, see 8.5.3, with the aid of the k-class K2 information or using a direct tension indicator, see 8.5.6. and art 12.5.2.6 of EN 1090-2.

For the second step, visual inspection shall be carried out on 100 % of the bolt assemblies. Fully tightened bolt assemblies are identified as those with the spline end sheared off. A bolt assembly for which the spline end remains is considered to be under-tightened.

If tightening of HRC bolt assemblies is completed using the torque method according to 8.5.3 or by the DTI method to 8.5.6, they shall be inspected according to 12.5.2.4 or 12.5.2.7 as appropriate.

Remarks to these descriptions in EN 1090-2:

1. The procedure for preloading in the fists step to close the package before turning of the splines to is not clear defined in NOTE 2 of the description. For example: the sound of the equipment may depend on the stiffness of the structure around the bolt assembly as well. Up to now it is not defined between which values of $f_{ub}A_s$ the tightening of the first step will lead.
2. If splines of bolts are turned off before the packages are fully packed, the bolts shall be removed and replaced by new ones, to reach the firm closure of the packages.
3. According to EN 14399-9 table 9, the bolt assemblies shall during production be calibrated to preload values ≥ 0,7 $f_{ub}A_s$ with a mean value ≥ 0,77 $f_{ub}A_s$, and a V_{ft} ≤ 0,10.

   Five tests shall be carried out.

   For V_{ft} ≤ 0,10 the mean target value for pre loading has to be ≥0,85 $f_{ub}A_s$ to meet the 95% reliability asked for in EN 1990.
4. The life time for a corrosion protection on the turned off surfaces of the bolts may be critical for the durability of the structure under weather circumstances. Grinding of these surfaces before painting does not seem to be a realistic solution.

EN 14399-10

Table 9 — Limiting values of bolt force at the fracture of the spline-end

Thread d	Nominal stress area of standard test mandrel A_s mm^2	$F_{r\,min}$ $0{,}7 \times f_{ub} \times A_s$ [a] N	$F_{r\,mean\,min}$ $0{,}77 \times f_{ub} \times A_s$ [a] N
M12	84,3	59 010	64 911
M16	157	109 900	120 890
M20	245	171 500	188 650
M22	303	212 100	233 310
M24	353	247 100	271 810
M27	459	321 300	353 430
M30	561	392 700	431 970

[a] f_{ub} is the nominal tensile strength of the bolt ($R_{m,\,nom}$).

5.6 Tightening by the Direct Tension Indicator (DTI) Method

5.6.1 General

The use of the compressible washer-type direct tension indicators is described in Annex J of EN 1090-2.

An essential part of this annex is given in Annex E of this paper.

The system consists of an extra washer with protrusions, to be placed between the plate surface and one of the flat washers of the bolt assembly. The thickness and the number of protrusion on the DTI washers depends on the size and the material quality (8.8 or 10.9) of the bolt assemblies used. The tightening starts with a gap between the DTI washer and the bolt assembly plain washer. The amount of flattening of the protrusions indicates the preload on the bolts during tightening. The protrusions don't spring back when the load should decrease.

The great difference between the DTI and the other three methods is the way of measuring the preload during tightening. The DTI method measured the preload on an indirect and a non constant way by the amount of flattening of the protrusion with external feelers in both steps.

The Torque and HRC method are direct and constant measuring the preload by the moment needed to turn the nut in both steps, the Combined method measured the first step by the moment and the second step by the deference in the markings between the nut and the shaft.

In fact, the DTI measured by the flattening of the external protrusions and the other methods by the elongation of the bold shaft.

The criterion for the realization of the tightening by the DTI method in EN 1090-2 is based on the deformation of the protrusions as an indication for the reached preload on the bolts. As the total width of this gap for a M20 - 10.9 bolt is about 1.5 mm, the deformation should be measured in tenths of mm. As the end cap should be ≤ 0,25 mm, the total flattening has to be between 1,25 and 1,5 mm. With a pitch of 2,5 mm for an M20 bolt the total needed rotation should be between 180° and 216°, a final target range of 36°.

NOTE:

The protrusion in a DTI washer for a M20 bolt is about 1,5 mm. The pitch of a M20 bolt is 2,5 mm.
The remaining gap after tightening should be ≤ 0,25 mm, but not closed.
So the total rotation to flatten the protrusions should be a bit more than 1,25 mm or 180°.
Maybe 120° in step one (plus the compression of the connection) and 60° left for step 2.
The final target range maybe the 0,25 mm left or just 36° degrees.
So the target average may be 20° with a spread of +/- 15$^{o.}$. Needs precision.

5.6.2 Tightening first step

The first step of this method it is essential to close the steel plate package fully. Otherwise, the first final tightened bolts in step 2 are prone to being unloaded by a further compression of the package during the final tightening of subsequent bolt assemblies.

This point may not easily be reached during execution because of the small dimensions of these protrusions. No preload force for the first step is determined by the EN 1090-2 code and there is no demanded flattening/preload curve available in the EN 14399-9. The firm closure of the plates in the connection shall be reached by a go around flattening of the DTI washers, measuring the remained gaps to remain sufficient above the end gaps, to remain capacity for the second step.

This needs concentration and workmanship.

5.6.3 Tightening second step

In the second step the protrusions shall be deformed till their final positions.

When the DTI is placed on the side where the bolt assembly is tightened by turning the nut or bolt head the gap should be less than 0,25 mm, when the DTI is placed on the opposite side less than 0,40 mm. After the tightening, the width of the gaps shall be checked for all bolt assemblies using a feeler gauge as a “no go” inspection tool. The feeler gauge shall be place between the protrusions, pointed to the centre of the bolt. At least half of the number of the passages between the protrusion shall be too narrow for the feeler.

No more than 10% of the bolt assemblies shall be fully pressed together, to avoid that the bolt or nut is tightened with a too great and/or uncontrolled angle of rotation.

According to EN 14399-10, the DTI washers shall be calibrated during production on preload values between 0,7 $f_{ub}A_s$ and 0,84 $f_{ub}A_s$, with 0,77 $f_{ub}A_s$ as average. These values are reached when the gap between the washers is reduced to the values given in Table J.1 of EN 1090-2. The production tests exists of 8 samples, each with a positive result. They produce a reliability over 95% with this production tests.

It should be recognized that these results are reached by well skilled and well trained operators under laboratories circumstances. In practice the bolt assemblies should be installed by construction workers on site under all whether circumstances, with the task to measure on tenths of millimeters.

NOTE: After the final preloading a small final gap remains between the DTI washer and the contra surface, which may be sensitive for splice corrosion and may give access for possible stress corrosion in the preloaded thread of the bolt, when the bolt material is sensitive for this reaction.

Annex A

EN 1090-2: clause 8.5 Tightening of preloaded bolts

8.5.1 General

Unless otherwise specified the nominal minimum preloading force Fp,C shall be taken as:

$F_{p,C} = 0,7\ f_{ub}A_s$ where fub is the nominal ultimate strength of the bolt material and As is the stress area of the bolt

as defined in EN 1993-1-8 and specified in Table 19. This level of preload shall be used for all slip resistant preloaded connections and for all other preloaded connections unless a lower level of preload is specified. In the latter case, the bolt assemblies, the tightening method, the tightening parameters and the inspection requirements shall also be specified.

NOTE Preload may be used for slip resistance, for seismic connections, for fatigue resistance, for execution purposes, or as a quality measure (e.g. for durability).

Table 19 — Values of Fp,C in [kN]

Property class	Bolt diameter in mm							
	12	16	20	22	24	27	30	36
8.8	47	88	137	170	198	257	314	458
10.9	59	110	172	212	247	321	393	572

Any of the tightening methods given in Table 20 may be used unless restricitions on their use are specified. The k-class (as-delivered calibration condition) of the bolting assembly shall be in accordance with Table 20 for the method used.

Table 20 — K-classes for tightening methods

Tightening method	k-classes
Torque method	K2
Combined method	K2 or K1
HRC tightening method	K0 with HRD nut only or K2
Direct tension indicator (DTI) method	K2, K1 or K0

As an alternative, calibration to Annex H may be used, except for the torque method unless this is permitted in the execution specification.

The as-delivered calibration is valid for tightening by rotation of the nut. If tightening is done by rotation of the bolt head, calibration shall be done according to Annex H or by supplementary testing from the fastener manufacturer otherwise in accordance with EN 14399-2.

Burrs, loose material and excessive thickness of paint that would prevent solid seating of the connecting parts shall be removed before assembly.

Before commencement of preloading, the connected components shall be fitted together and the bolts in a bolt group shall be tightened in accordance with 8.3 but the residual gap shall be limited to 2 mm with the necessary corrective action on steel components.

Tightening shall be performed by rotation of the nut except where the access to the nut side of the assembly is inadequate. Special precautions, depending on the tightening method adopted, may have to be taken when bolts are tightened by rotation of the bolt head.

!Both at the first step and at the final tightening step, tightening" shall be carried out progressively from the most rigid part of the joint to the least rigid part. To achieve uniform preloading, more than one cycle of tightening may be necessary.

Torque wrenches used in all steps of the torque method shall be capable of an accuracy of ± 4 % according to EN ISO 6789. Each wrench shall be !maintained in accordance with EN ISO 6789, and in case of pneumatic wrenches checked every time" the hose length is changed. For torque wrenches used in the first step of the combined method these requirements are modified to ± 10 % for the accuracy and yearly for the periodicity.
Checking shall be carried out after any incident occurring during use (significant impact, fall, overloading etc.) and affecting the wrench.

Other tightening methods (e.g. axial preloading by hydraulic devices or tensioning with ultrasonic control) shall be calibrated in accordance with the recommendations from the equipment manufacturer.

High strength bolts for preloading shall be used without alteration to the as-delivered lubrication unless DTI method or the procedure in Annex H is adopted.

If a bolt assembly has been tightened to the minimum preload and is later un-tightened, it shall be removed and the whole assembly shall be discarded.

Bolt assemblies used for achieving initial fit up should not generally need to be tightened to the minimum preload or un-tightened, and would therefore still be usable in location in the final bolting up process.

NOTE If the tightening process is delayed under uncontrolled exposure conditions the performance of the lubrication may be altered and should be checked.

The potential loss of preloading force from its initial value due to several factors, e.g. relaxation, creep of surface coatings (see Annex F.4 and Table 18), is considered in the tightening methods specified below. In case of thick surface coatings, it shall be specified if measures shall be taken to offset possible subsequent loss of preloading force.

NOTE If the torque method is used this may be by retightening after a delay of some days.

8.5.2 Torque reference values

The torque reference values $M_{r,i}$ to be used for a nominal minimum preloading force "$F_{p,C}$" are determined for each type of bolt and nut combination used by one of the following options:

a) values based on k-class declared by the fastener manufacturer in accordance with the relevant parts of EN 14399:

1) $M_{r,2} = k_m\, d\, F_{p,C}$ with k_m for k-class K2.
2) $M_{r,1} = k_m\, d\, F_{p,C}$ with k_m for k-class K1.

b) values determined according to Annex H:

1) $M_{r,test} = M_m$ with M_m determined according to the procedure relevant to the tightening method to be used.

8.5.3 Torque method

The bolts shall be tightened using a torque wrench offering a suitable operating range. Hand or power operated wrenches may be used. Impact wrenches may be used for the first step of tightening for each bolt.

The tightening torque shall be applied continuously and smoothly.

Tightening by the torque method comprises at least the two following steps:

a) a first tightening step: the wrench shall be set to a torque value of about 0,75 $M_{r,i}$ with $M_{r,i} = M_{r,2}$ or $M_{r,test}$. This first step shall be completed for all bolts in one connection prior to commencement of the second step;

b) a second tightening step: the wrench shall be set to a torque value of 1,10 $M_{r,i}$ with $M_{r,i} = M_{r,2}$ or $M_{r,test}$.

NOTE The use of the 1,10 coefficient with $M_{r,2}$ is equivalent to (1 + 1,65 Vk) with Vk=0,06 for *k* class K2.

8.5.4 Combined method

Tightening by the combined method comprises two steps:

a) a first tightening step, using a torque wrench offering a suitable operating range. The wrench shall be set to a torque value of about 0,75 $M_{r,i}$ with $M_{r,i} = M_{r,2}$ or $M_{r,1}$ or $M_{r,test}$. This first step shall be completed for all bolts in one connection prior to commencement of the second step;

When using $M_{r,1}$, for simplification $M_{r,1}$ = 0,13 d !$F_{p,C}$" may be used unless otherwise specified

b) a second tightening step in which a specified part turn is applied to the turned part of the assembly. The position of the nut relative to the bolt threads shall be marked after the first step, using a marking crayon or marking paint, so that the final rotation of the nut relative to the thread in this second step can be easily determined.

The second step shall be in accordance with the values given Table 21 unless otherwise specified.

Table 21 — Combined method: additional rotation (8.8 and 10.9 bolts)

Total nominal thickness "*t*" of parts to be connected (including all packs and washers)	Further rotation to be applied, during the second step of tightening	
d = bolt diameter	Degrees	Part turn
$t < 2d$	60	1/6
$2d \le t < 6d$	90	1/4
$6d \le t \le 10d$	120	1/3
NOTE Where the surface under the bolt head or nut (allowing for taper washers, if used) is not perpendicular to the bolt axis, the required angle of rotation should be determined by testing		

8.5.5 HRC method

The HRC bolts shall be tightened using a specific shear wrench equipped with two co-axial sockets which react by torque one against the other. The outer socket which engages the nut rotates clockwise. The inner socket which engages the spline end of the bolt rotates anticlockwise.

NOTE 1 The shear wrench operates as follows:

- during the tightening operation of an assembly, the socket in rotation is the one that finds the least resistance to it;

- from the outset and right up to the last tightening !step", the outer socket on the nut rotates clockwise while the inner socket holds the spline end without rotating, the result being that the bolt assembly is progressively tightened by the increasing torque applied to the nut;

- at the last tightening !step", i.e. when the torsional resistance plateau of the break-neck section is attained, the inner socket rotates anticlockwise while the outer socket on nut provides the reaction without rotating;

- the bolt assembly installation is complete when the spline end shears off at the break-neck section.

The specified preload requirement is controlled by the HRC bolt itself by means of the geometrical and torsion mechanical characteristics together with the lubrication conditions. The equipment does not need calibration.

In order to ensure that the preloads in fully installed bolts in connections meet the specified minimum preload requirement, the bolt installation process generally comprises two tightening steps; both using the shear wrench.

The first tightening step is achieved at the latest when the shear wrench outer socket stops turning. If specified this first step is repeated as often as required. This first step shall be completed for all bolts in one connection prior to commencement of the second step.

NOTE 2 Guidance of the equipment manufacturer may give additional information on how to identify if pretightening has occurred, e.g. sound of shear wrench changing, or if other methods of pretightening are suitable.

The second tightening step is achieved when the spline end of the bolt shears off at the break-neck.

If the assembly conditions are such that it is not possible to use the shear wrench on the HRC bolt assembly, e.g. for lack of space, tightening !shall be carried out using a procedure in accordance with the torque" control method, see 8.5.3, with the aid of the k-class K2 information or using a direct tension indicator, see 8.5.6.

8.5.6 Direct tension indicator method

This subclause applies to compressible washers, such as direct tension indicators in accordance with prEN 14399-9, which indicate at least the required minimum preload has been achieved, by monitoring the force in the bolt. It does not cover indicators that rely on torsion. It does not apply to direct measurement of bolt preload by use of hydraulic instruments.

The direct tension indicators and their associated washers shall be assembled as specified in Annex J.

The first step of tightening to reach a uniform "snug-tight" condition of a fastener assembly shall be when initial deformation of the DTI protrusions begins. This first step shall be completed for all bolts in one connection prior to commencement of the second step.

The second step of tightening shall be as prEN 14399-9 and Annex J. The gaps measured on the indicating washer may be averaged to establish the acceptability of the bolt assembly.

Annex B

Used codes:

EN1090-1:2009+A1:2011	-Execution of steel structures and aluminium structures Part 1: Requirements for conformity assessment of structural components
EN 1090-2+A1:2011	-Execution of steel structures and aluminium structures Part 2: Technical requirements for steel structures
EN 1990+A1+A1/C2:2011	- Basis of structural design

Overview EN 14399 codes:

EN 14399-1:2005*	-High-strength structural bolting assemblies for preloading General requirements
EN 14399-2:2005	- Suitability test for preloading
EN 14399-3:2005	- System HR – Hexagon bolt and nut assemblies
EN 14399-4:2005	- System HV – Hexagon bolt and nut assemblies
EN 14399-5:2005/AC	- Plain washers
EN 14399-6:2005	- Plain chamfered washers
EN 14399-7:2008	- System HR - Countersunk head bolt and nut assemblies
EN 14399-8:2008	- System HV - Hexagon fit bolt and nut assemblies
EN 14399-9:2009	- System HR or HV - Direct tension indicators for bolt and nut assemblies
EN 14399-10:2009	- System HRC - Bolt and nut assemblies with calibrated preload

* Harmonized code. This series of EN 14399 codes are part of CE-marking.

Annex C

Results tightening methods related to the rotation/bolt force lines of EN 14399-2 “general”,EN 14399-3 “HR bolts” and EN 14399-4 “HV bolts”

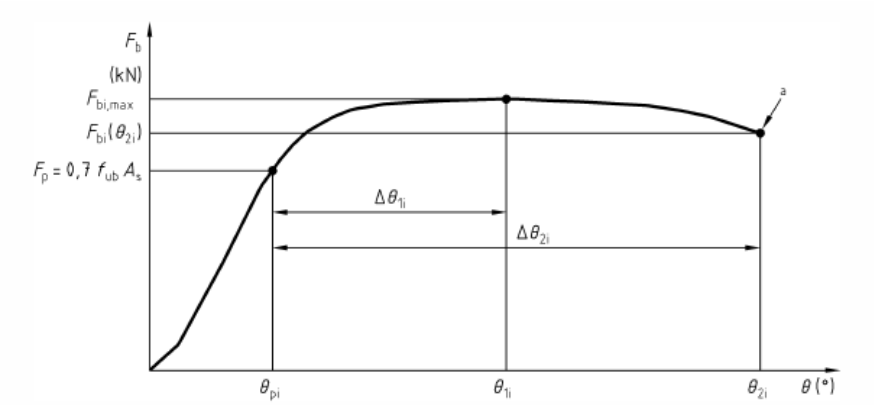

EN 14399-2 “General requirements” Figure 2.

In this figure of EN 14399-2 is

- $\Delta\Theta_1$ defined as the angle difference between $F_p = 0.7\ F_{ub}A_s$ and the rotation at the maximum bolt force $F_{bi,max}$ i.
- $\Delta\Theta_2$ is defined as the angle difference between $F_p = 0.7\ F_{ub}A_s$ and the rotation where the test is stopped.

Figure 2 EN 14399-2 corrected according to EN 14399-3 and EN 14399-4 and used for the evaluation

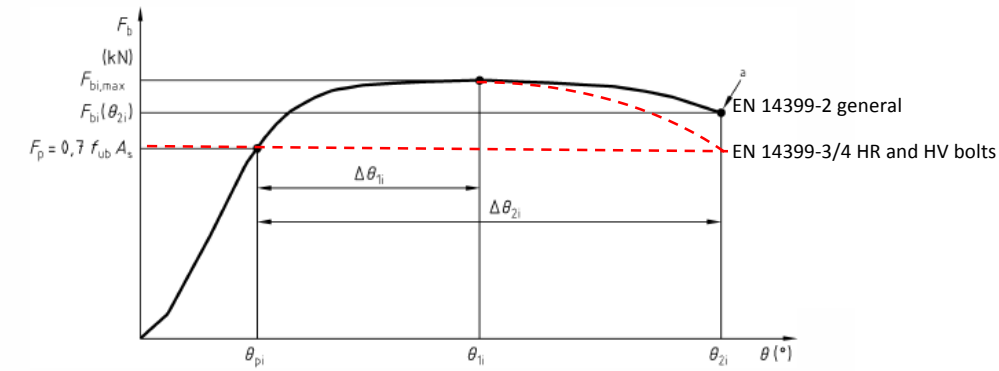

EN 14399-3 and EN 14399-3 gives a more specific definition of the $\Delta\Theta_1$ and $\Delta\Theta_2$ value.

In these codes

- $\Delta\Theta_1$ is defined as the angle by which the nut (or bolt) has to be turned starting from a preload of $F_p = 0.7\ F_{ub}A_s$ until the maximum bolt force $F_{bi,max}$ is reached.

- $\Delta\Theta_2$ is defined as the angle by which the nut (op bolt) has to be turned starting from a preload of $F_p = 0.7\ F_{ub}A_s$ until F_{bi} has dropped again to $F_p = 0.7\ F_{ub}A_s$.

This evaluation makes use of the corrected line as the nominal or nominal rotation/bolt force line for the determination of the pre-loads in the bolt assemblies.

EN 14399-3 (HR)

7.3 Angle by which the nut (or bolt) has to be turned starting from a preload of 0,7 $f_{ub} \times A_s$ until $F_{bi\ max}$ is reached ($\Delta\Theta_1$)

The values indicated in Table 8 are for information only.

Table 8 — Values for $\Delta\Theta_1$

Clamp length Σt[a]	$\Delta\Theta_1$ min.
$\Sigma t < 2\,d$	90°
$2\,d \leq \Sigma t < 6\,d$	120°
$6\,d \leq \Sigma t \leq 10\,d$	150°

[a] Σt is the total thickness of the clamped parts including washer(s).

7.4 Angle by which the nut (or bolt) has to be turned starting from a preload of 0,7 $f_{ub} \times A_s$ until F_{bi} has dropped again to 0,7 $f_{ub} \times A_s$ ($\Delta\Theta_2$)

The values for $\Delta\Theta_2$ specified in Table 9 apply.

Table 9 — Values for $\Delta\Theta_2$

Grip length Σt[a]	$\Delta\Theta_2$ min.
$\Sigma t < 2\,d$	210°
$2\,d \leq \Sigma t < 6\,d$	240°
$6\,d \leq \Sigma t \leq 10\,d$	270°

[a] Σt is the total thickness of the clamped parts including washer(s).

EN 13499-4 (HV)

7.4 Angle by which the nut (or bolt) has to be turned starting from a preload of 0,7 $f_{ub} \times A_s$ until F_{bi} has dropped again to 0,7 $f_{ub} \times A_s$ ($\Delta\Theta_2$)

The values for $\Delta\Theta_2$ specified in Table 7 apply.

Table 7 — Values for $\Delta\Theta_2$

Grip length Σt[a]	$\Delta\Theta_2$ min.
$\Sigma t < 2\,d$	180°
$2\,d \leq \Sigma t < 6\,d$	210°
$6\,d \leq \Sigma t \leq 10\,d$	240°

[a] Σt is the total thickness of the clamped parts including washer(s).

7.3 Angle by which the nut (or bolt) has to be turned starting from a preload of 0,7 $f_{ub} \times A_s$ until $F_{bi\ max}$ is reached ($\Delta\Theta_1$)

The values indicated in Table 6 are for information only.

Table 6 — Values for $\Delta\Theta_1$

Clamp length Σt[a]	$\Delta\Theta_1$ min.
$\Sigma t < 2\,d$	90°
$2\,d \leq \Sigma t < 6\,d$	120°
$6\,d \leq \Sigma t \leq 10\,d$	150°

[a] Σt is the total thickness of the clamped parts including washer(s).

Annex: D.1.1

Determination reliability of the torque method for tightening bolt assemblies.

Input V_k = 0,10 and mean value 0,77 $f_{ub}A_s$, alternative 0,80 $f_{ub}A_s$.

Determination for the combined coefficient of variation (Vkt) including the variations of the tools used for testing and installation			According EN 1090-2	alternative
Coefficient of variation k-factor (V_k) for bolt assemblies. allowed in clause 7.5.2 of EN 14399-3 and EN 14399-4		A	**0,10**	**0,10**
Coefficient of variation k-factor (V_k) for testing tools.				
	EN 14399-2: the required accuracy of the bolt force measuring device	B	0,02	0,02
	EN 14399-2: the repeatability of the bolt force measuring device	C	0,01	0,01
	EN 14399-2: the required accuracy of-the torque	D	0,01	0,01
	EN 14399-2: the repeatability of the torque	E	0,01	0,01
Coefficient of variation k-factor (V_k) for installation tools				
	EN 1090-2: the required accuracy of the torque in the second step	F	0,04	0,04
Comined k-factor ($V_{comb.}$) $(A^2 + B^2 + C^2 + D^2 + E^2 + F^2)^{0,5}$			0,111	0,111

Determination of the achieved reliability for the nominal minimum preload.

	top value for bolt assembly failure = 0,90		$f_{ub}A_s$	0,90	0,90
	bottom value for preload = 0,70		$f_{ub}A_s$	**0,70**	**0,70**
	coefficient of variation of k-factor (V_k) bolt assembly			0,10	0,10
a	Comined k-factor ($V_{comb.}$)			0,111	0,111
b	target/mean value Normal distribution		$f_{ub}A_s$	0,77	**0,80**
c	β- index for reliability 95%			1,65	1,65
d	5 % top value, should be equal or below 0,90	(1 + 1,65 x a)b	$f_{ub}A_s$	0,911	0,946
e	percentage to bolt assembly failure, should be equal or below 100%	d / 0,90	%	**101,2**	**105,2**
f	real β-index for reliability	(0,90-b)/(a x b)		1,522	1,127
g	reliability for failure	van f naar g	%	93,6	87,0
h	95% bottom value, equal or higher than 0,70	(1 -1,65 x a)b	$f_{ub}A_s$	**0,629**	**0,654**
j	percentage compared to minimal preload, shall be equal or over 100%	h / 0,70	%	89,9	93,4
k	real β-index for reliability	(b-0,70)/(a x b)		0,820	1,127
L	**reliability for nominal minimum preload, shall be equal or over 95%**	**from k to L**	**%**	**79,4**	**87,0**

Annex: D.1.2

Determination reliability of the torque method for tightening bolt assemblies.

Input V_k = 0,06 and mean value 0,77 $f_{ub}A_s$, alternative 0,80 $f_{ub}A_s$.

Determination for the combined coefficient of variation (Vkt) including the variations of the tools used for testing and installation			alternative	alternative
Coefficient of variation k-factor (V_k) for bolt assemblies. alternative on clause 7.5.2 of EN 14399-3 and EN 14399-4		A	0,06	0,06
Coefficient of variation k-factor (V_k) for testing tools.				
	EN 14399-2: the required accuracy of the bolt force measuring device	B	0,02	0,02
	EN 14399-2: the repeatability of the bolt force measuring device	C	0,01	0,01
	EN 14399-2: the required accuracy of-the torque	D	0,01	0,01
	EN 14399-2: the repeatability of the torque	E	0,01	0,01
Coefficient of variation k-factor (V_k) for installation tools				
	EN 1090-2: the required accuracy of the torque in the second step	F	0,04	0,04
Comined k-factor ($V_{comb.}$) $(A^2 + B^2 + C^2 + D^2 + E^2 + F^2)^{0,5}$			0,077	0,077
Determination of the achieved reliability for the nominal minimum preload.				
	top value for bolt assembly failure = 0,90	$f_{ub}A_s$	0,90	0,90
	bottom value for preload = 0,70	$f_{ub}A_s$	0,70	0,70
	coefficient of variation of k-factor (V_k) bolt assembly		0,10	0,10
a	Comined k-factor ($V_{comb.}$)		0,077	0,077
b	target/mean value Normal distribution	$f_{ub}A_s$	0,77	**0,80**
c	β- index for reliability 95%		1,65	1,65
d	5 % top value, should be equal or below 0,90	(1 + 1,65 x a)b	$f_{ub}A_s$	**0,868**	**0,901**
e	percentage to bolt assembly failure, should be equal or below 100%	d / 0,90	%	**96,4**	**100,2**
f	real β-index for reliability	(0,90-b)/(a x b)		2,198	1,627
g	reliability for failure	van f naar g	%	98,6	94,8
h	95% bottom value, equal or higher than 0,70	(1 -1,65 x a)b	$f_{ub}A_s$	**0,672**	**0,699**
j	percentage compared to minimal preload, shall be equal or over 100%	h / 0,70	%	96,1	99,8
k	real β-index for reliability	(b-0,70)/(a x b)		1,184	1,627
L	**reliability for nominal minimum preload, shall be equal or over 95%**	**from k to L**	**%**	**88,2**	**94,8**

Annex: D.1.3

Determination reliability of the torque method for tightening bolt assemblies.

Input V_k = 0,10 and mean value 0,77 $f_{ub}A_s$, alternative material factor Φ_M = 1,10 .

Determination for the combined coefficient of variation (Vkt) including the variations of the tools used for testing and installation			According EN 1090-2	alternative
Coefficient of variation k-factor (V_k) for bolt assemblies. allowed in clause 7.5.2 of EN 14399-3 and EN 14399-4		A	0,10	0,10
Coefficient of variation k-factor (V_k) for testing tools.				
	EN 14399-2: the required accuracy of the bolt force measuring device	B	0,02	0,02
	EN 14399-2: the repeatability of the bolt force measuring device	C	0,01	0,01
	EN 14399-2: the required accuracy of-the torque	D	0,01	0,01
	EN 14399-2: the repeatability of the torque	E	0,01	0,01
Coefficient of variation k-factor (V_k) for installation tools				
	EN 1090-2: the required accuracy of the torque in the second step	F	0,04	0,04
Comined k-factor ($V_{comb.}$) $(A^2+B^2+C^2+D^2+E^2+F^2)^{0,5}$			0,111	0,111

Determination of the achieved reliability for the nominal minimum preload.

	top value for bolt assembly failure = 0,90		$f_{ub}A_s$	0,90	0,90
AA	bottom value for preload = 0,70 , **alternative 0,70/1,10 = 0,636**		$f_{ub}A_s$	0,70	0,636
	coefficient of variation of k-factor (V_k) bolt assembly			0,10	0,10
a	Comined k-factor ($V_{comb.}$)			0,111	0,111
b	target/mean value Normal distribution		$f_{ub}A_s$	0,77	**0,77**
c	β- index for reliability 95%			1,65	1,65
d	5 % top value, should be equal or below 0,90	(1 + 1,65 x a)b	$f_{ub}A_s$	**0,911**	**0,911**
e	percentage to bolt assembly failure, should be equal or below 100%	d / 0,90	%	**101,2**	**101,2**
f	real β-index for reliability	(0,90-b)/(a x b)		1,522	1,522
g	reliability for failure	van f naar g	%	93,6	93,6
h	percentage to bolt assembly failure, should be equal or below 100%	(1 -1,65 x a)b	$f_{ub}A_s$	**0,629**	**0,629**
j	percentage compared to minimal preload, shall be equal or over 100%	h / 0,70 h/0,636	%	89,9	98,9
k.1	real β-index for reliability	(b-0,70)/(a x b)		0,820	
k.2	real β-index for reliability	(b-0,636)/(a x b)			1,569
L	**reliability for nominal minimum preload, shall be equal or over 95%**	**from k to L**	**%**	**79,4**	**94,2**

Figure D.1

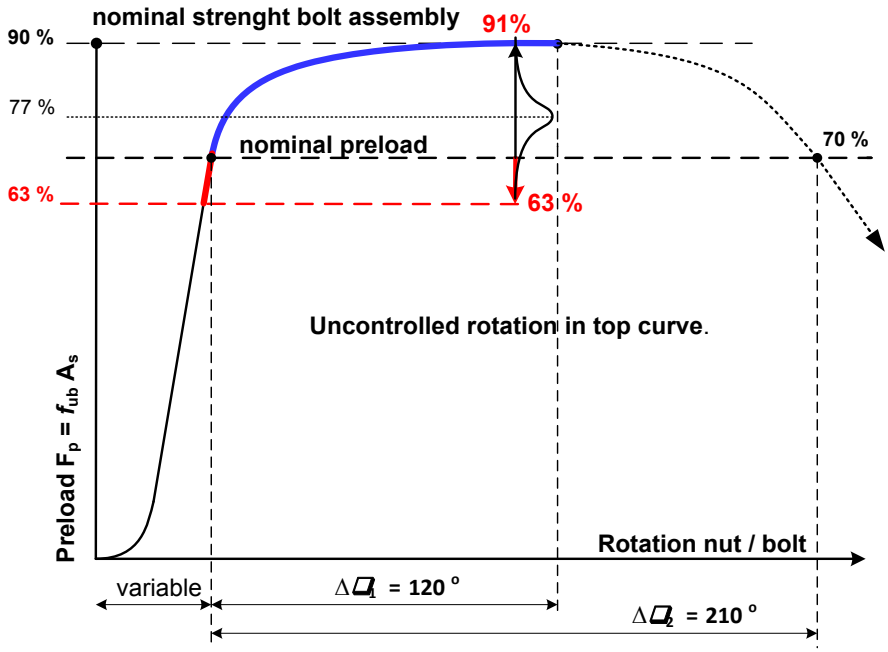

Torque method, distribution preloads according to EN 1090-2 art. 8.5.3
V_k = 0,10 with mean value 0,77 f_{ub} A_s

Figure D.2

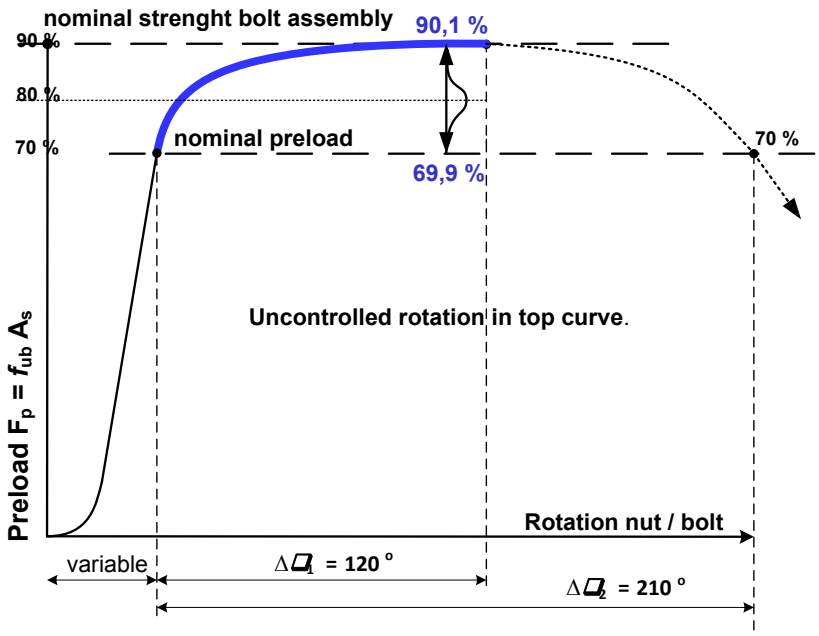

Torque method, distribution preloads according to EN 1090-2 art. 8.5.3

Version V_k = 0,06 with mean value 0,80 f_{ub} A_s

Figure D.3

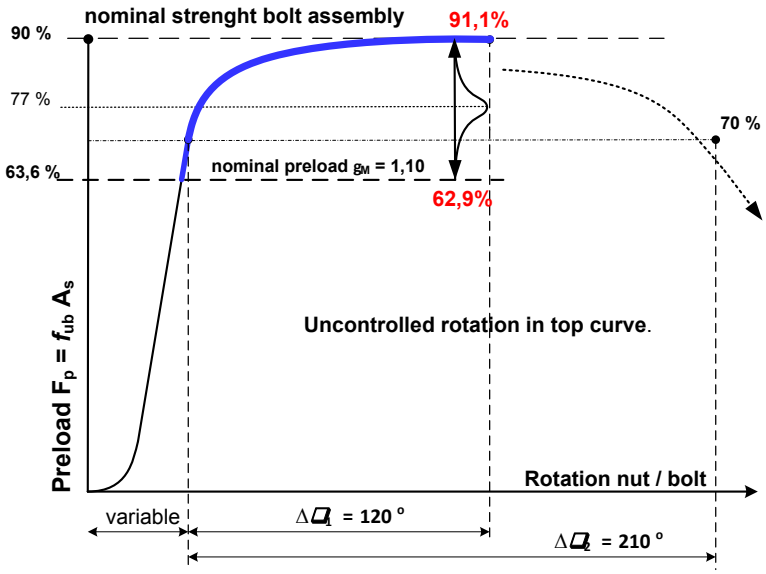

Torque method, distribution preloads according to EN 1090-2 art. 8.5.3

Version V_k = 0,10 with g_{torque} = 1,10 leading to a nominal preload 0,70 f_{ub} A_s /1,10 = 0,636 f_{ub} A_s

Figure D.4

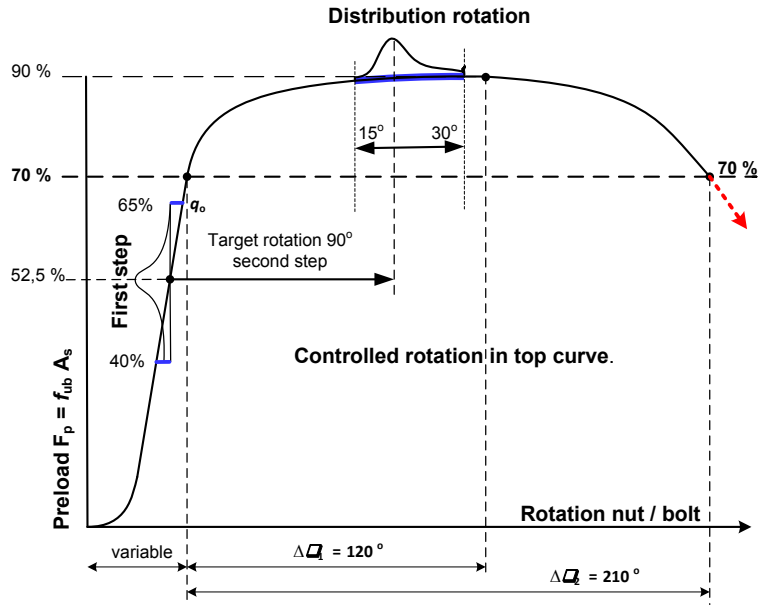

Combined method,
distribution according to EN 1090-2 art. 8.5.4.

distribution second step with rotation first step neglected.

Annex: D.2.1

Determination reliability of the HRC method for tightening bolt assemblies

Input V_k = 0,10 with target values 0,77 and 0,85 $f_{ub}A_s$

				According EN 14399-10	alternative
Determination for the combined coefficient of variation (Vkt) including the variations of the tools used for testing and installation					
	allowed in clause 7.5.2 of EN 14399-3 and EN 14399-4		A	**0,10**	**0,10**
Coefficient of variation k-factor (V_k) for testing tools.					
	EN 14399-2: the required accuracy of the bolt force measuring device		B	0,02	0,02
	EN 14399-2: the repeatability of the bolt force measuring device		C	0,01	0,01
	EN 14399-2: the required accuracy of-the torque		D	0,01	0,01
	EN 14399-2: the repeatability of the torque		E	0,01	0,01
Coefficient of variation k-factor (V_k) for installation tools					
	All influences in bolt assembly, no influence by assembly tools		F	0,00	0,00
Comined k-factor ($V_{comb.}$)	$(A^2 + B^2 + C^2 + D^2 + E^2 + F^2)^{0,5}$			0,103	0,103
Determination of the achieved reliability for the nominal minimum preload.					
	top value for bolt assembly failure = 0,90		$f_{ub}A_s$	not applicable	
	bottom value for preload = 0,70		$f_{ub}A_s$	0,70	0,70
	coefficient of variation of k-factor (V_k) bolt assembly			0,10	0,10
a	Comined k-factor ($V_{comb.}$)			0,103	0,103
b	target/mean value Normal distribution		$f_{ub}A_s$	0,77	**0,85**
c	β- index for reliability 95%			1,65	1,65
d	5 % top value, should be equal or below 0,90	(1 + 1,65 x a)b	$f_{ub}A_s$	0,901	**0,995**
e	percentage to bolt assembly failure,	d / 0,90	%		acceptable
f	real β-index for reliability	(0,90-b)/(a * b)			??????
g	reliability for failure	van f naar g	%		
h	95% bottom value, shall be equal or over 0,70	(1 -1,65 x a)b	$f_{ub}A_s$	0,639	0,705
j	pecentage compared to minimal preload, shall be equal or over 100%	h / 0,70	%	91,2	100,7
k	real β-index for reliability	(b-0,70)/(a * b)		0,879	1,706
l	**reliability for nominal minimum preload, shall be equal or over 95%**	from f to g	%	81,0	**95,6**

Annex: D.2.2

Determination reliability of the HRC method for tightening bolt assemblies

Input Vk = 0,06 with target values 0,77 and 0,79 fubAs

				According EN 14399-10	alternative
Determination for the combined coefficient of variation (Vkt) including the variations of the tools used for testing and installation					
Coefficient of variation k-factor (V_k) for bolt assemblies. as mentioned in NOTE clause 5.5.3 b) EN 1090-2			A	0,06	0,06
Coefficient of variation k-factor (V_k) for testing tools.					
	EN 14399-2: the required accuracy of the bolt force measuring device		B	0,02	0,02
	EN 14399-2: the repeatability of the bolt force measuring device		C	0,01	0,01
	EN 14399-2: the required accuracy of-the torque		D	0,01	0,01
	EN 14399-2: the repeatability of the torque		E	0,01	0,01
Coefficient of variation k-factor (V_k) for installation tools					
	All influences in bolt assembly, no influence by assembly tools		F	0,00	
Comined k-factor ($V_{comb.}$) $(A^2 + B^2 + C^2 + D^2 + E^2 + F^2)^{0,5}$				0,066	0,066
Determination of the achieved reliability for the nominal minimum preload.					
	top value for bolt assembly failure = 0,90		$f_{ub}A_s$	not applicable	
	bottom value for preload = 0,70		$f_{ub}A_s$	0,70	0,70
	coefficient of variation of k-factor (V_k) bolt assembly			0,10	0,10
a	Comined k-factor ($V_{comb.}$)			0,066	0,066
b	target/mean value Normal distribution		$f_{ub}A_s$	0,77	**0,79**
c	β- index for reliability 95%			1,65	1,65
d	5 % top value, should be equal or below 0,90	(1 + 1,65 x a)b	$f_{ub}A_s$	0,853	0,875
e	percentage to bolt assembly failure,	d / 0,90	%	not applicable	
f	real β-index for reliability	(0,90-b)/(a * b)			
g	reliability for failure	van f naar g	%		
h	95% bottom value, shall be equal or over 0,70	(1 -1,65 x a)b	$f_{ub}A_s$	0,687	0,705
j	pecentage compared to minimal preload, shall be equal or over 100%	h / 0,70	%	98,1	100,6
k	real β-index for reliability	(b-0,70)/(a * b)		1,386	1,737
L	**reliability for nominal minimum preload, shall be equal or over 95%**	**from k to L**	%	**91,7**	**95,9**

Annex: D.2.3

Determination reliability of the HRC method for tightening bolt assemblies

Input V_k = 0,10 and mean value 0,77 $f_{ub}A_s$, alternative material factor γ_M = 1,10 .

				According EN 14399-10	alternative
Determination for the combined coefficient of variation (Vkt) including the variations of the tools used for testing and installation					
Coefficient of variation k-factor (V_k) for bolt assemblies. as mentioned in NOTE clause 5.5.3 b) EN 1090-2			A	0,10	0,10
Coefficient of variation k-factor (V_k) for testing tools.					
	EN 14399-2: the required accuracy of the bolt force measuring device		B	0,02	0,02
	EN 14399-2: the repeatability of the bolt force measuring device		C	0,01	0,01
	EN 14399-2: the required accuracy of-the torque		D	0,01	0,01
	EN 14399-2: the repeatability of the torque		E	0,01	0,01
Coefficient of variation k-factor (V_k) for installation tools					
	All influences in bolt assembly, no influence by assembly tools		F	0,00	0,00
Comined k-factor ($V_{comb.}$) $(A^2+B^2+C^2+D^2+E^2+F^2)^{0,5}$				0,103	0,103
Determination of the achieved reliability for the nominal minimum preload.					
	top value for bolt assembly failure = 0,90		$f_{ub}A_s$	not applicable	
AA	bottom value for preload = 0,70	0,70 and 0,70/1,10	$f_{ub}A_s$	0,70	**0,636**
	coefficient of variation of k-factor (V_k) bolt assembly			0,10	0,10
a	Comined k-factor ($V_{comb.}$)			0,103	0,103
b	target/mean value Normal distribution		$f_{ub}A_s$	**0,77**	**0,77**
c	β- index for reliability 95%			1,65	1,65
d	5 % top value, should be equal or below 0,90	(1 + 1,65 x a)b	$f_{ub}A_s$	0,901	0,901
e	percentage to bolt assembly failure,	d / 0,90	%	not applicable	
f	real β-index for reliability	(0,90-b)/(a * b)			
g	reliability for failure	van f naar g	%		
h	95% bottom value, shall be equal or over 0,70	(1 -1,65 x a)b	$f_{ub}A_s$	0,639	0,639
j	pecentage compared to minimal preload, shall be equal or over 100%		%	91,2	100,3
k	real β-index for reliability	(b-0,70)/(a * b)		0,879	1,682
L	**reliability for nominal minimum preload, shall be equal or over 95%**	**from k to L**	%	**81,0**	**95,4**

Figure D.5

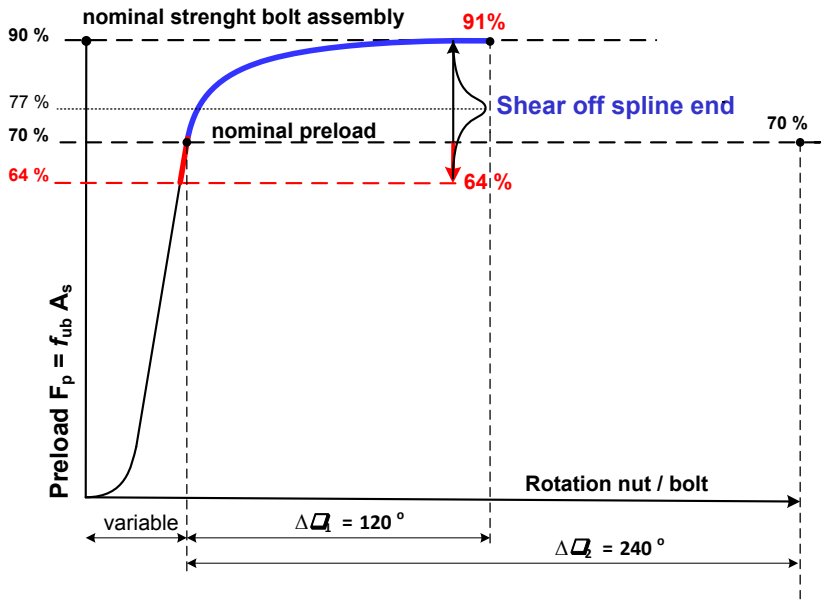

HRC method, distribution according to EN 1090-2 art. 8.5.3
V_k = 0,10 mean value 0,77 f_{ub} A_s

The spline end of the bolt shall shear off before full strenght of bolt is reached

Figure D.6

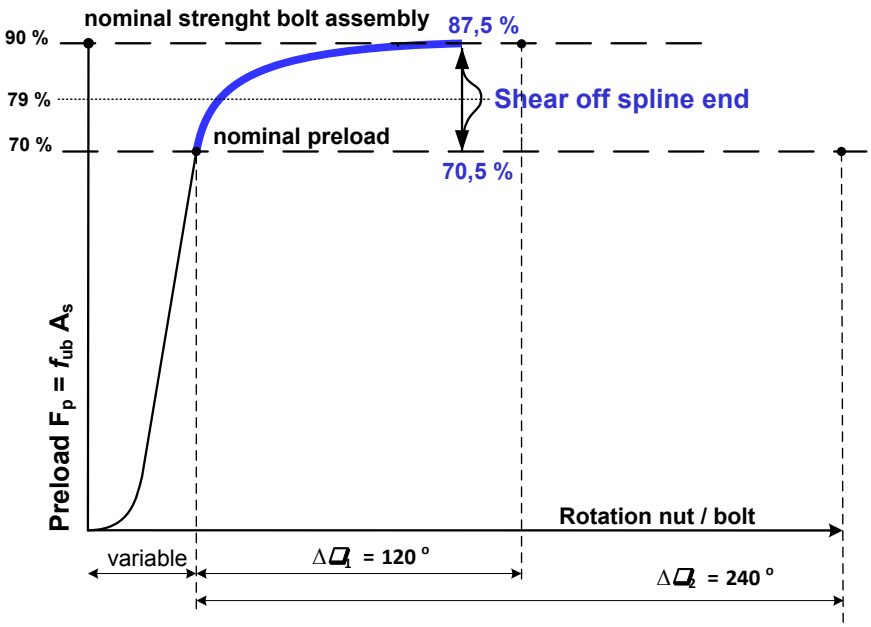

HRC method, distribution according to EN 1090-2 art. 8.5.3
Version V_k = 0,06 mean value 0,79 f_{ub} A_s

The spline end of the bolt shall shear off before full strenght of bolt is reached.

Figure D.7

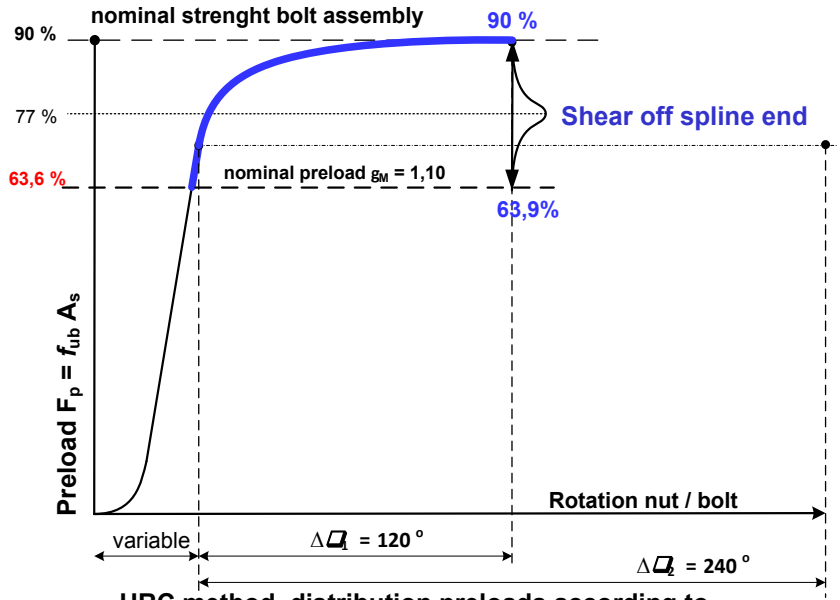

HRC method, distribution preloads according to EN 1090-2 art. 8.5.5

Version V_k = 0,10 with g_{torque} = 1,10 leading to a nominal preload 0,70 f_{ub} A_s /1,10 = 0,636 f_{ub} A_s

Figure D.8

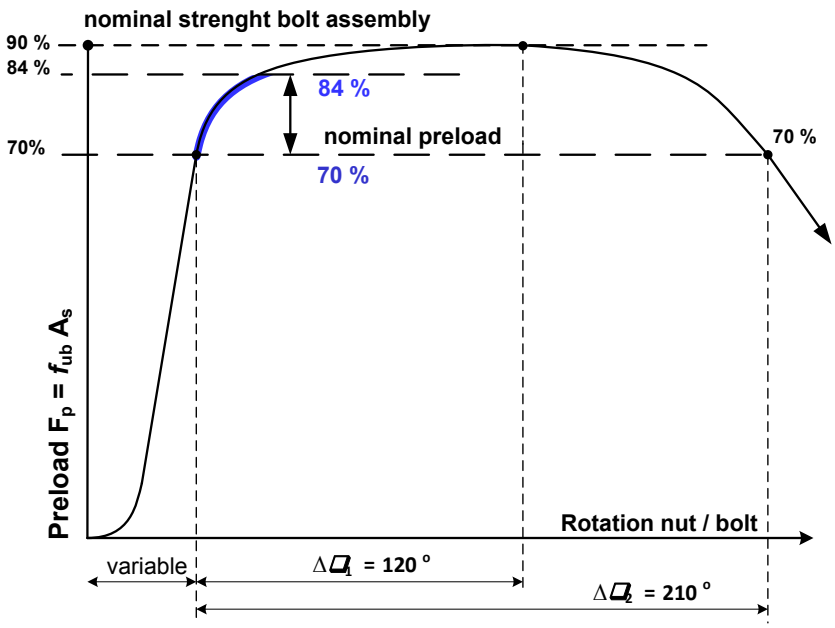

DTI method, distribution according to 8 load tests results EN 14399-9 table 4

Annex E

Table J.1 — Thickness of feeler gauge

Indicator positions	Thickness of feeler gauge (a) (mm)
Under bolt head, when nut is rotated (Figure J.1 a))	0,40
Under nut, when bolt is rotated (Figure J.2 a))	
Under nut, when nut is rotated (Figure J.1 b))	0,25
Under bolt head, when bolt is rotated (Figure J.2 b))	
(a) This table applies to both H8 and H10 DTIs	

The indicator gap shall be checked using the feeler gauge as a "no go" inspection tool. The feeler gauge shall be pointed at the centre of the bolt as shown in Figure J.3.

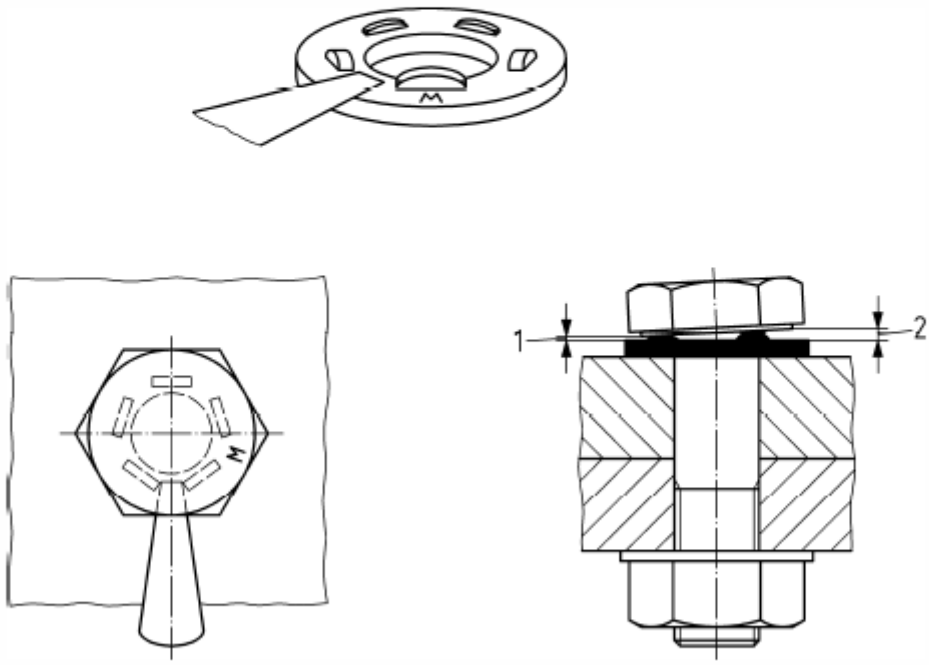

Key
1 "No go" gap if refusal occurs
2 "Go" gap if refusal does not occur

Figure J.3 — Checking the indicator gap

NOTE A washer shall be placed between the head of the bolt and de DTI when the bolt assembly is tightened by the turning of the bolt.

EN 14399-9

Table 4 — Indicator compression loads at appropriate gap (see Table 9)

Load in kN

For use with bolts of designation	Compression load			
	Designation H8		Designation H10	
	min.	max.	min.	max.
M12	47	56	59	71
M16	88	106	110	132
M20	137	164	172	206
M22	170	204	212	254
M24	198	238	247	296
M27	257	308	321	385
M30	314	377	393	472
M36	458	550	572	688
These minimum values are equal to $0{,}7 f_{ub} \times A_s$ in accordance with EN 1993-1-1:2005.				